APPENDIX - 7B

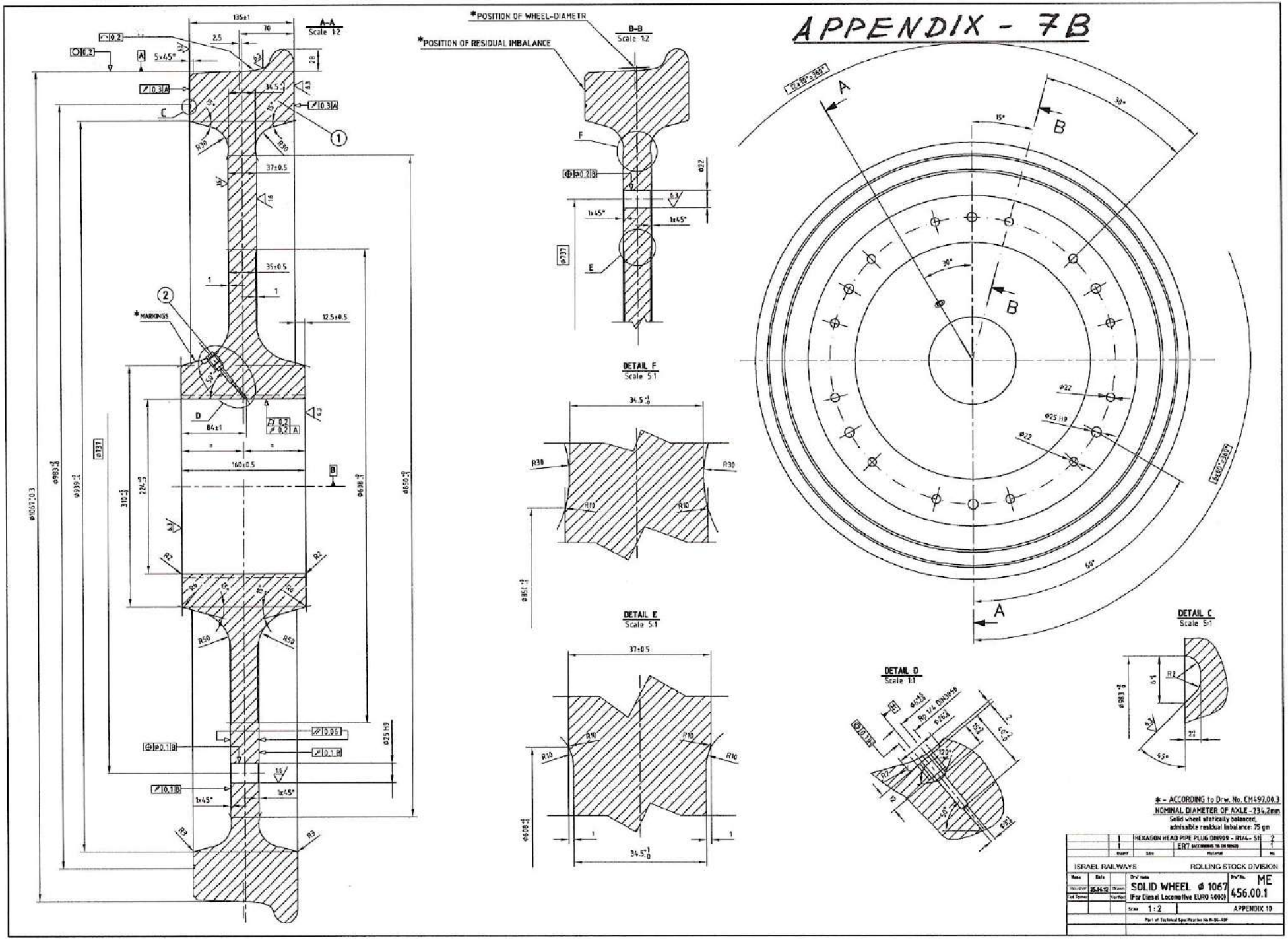
A-A
Scale 1:2
B-B
Scale 1:2
*POSITION OF WHEEL-DIAMETR
*POSITION OF RESIDUAL IMBALANCE
*MARKINGS
DETAIL F
Scale 5:1
DETAIL E
Scale 5:1
DETAIL D
Scale 1:1
DETAIL C
Scale 5:1
* - ACCORDING to Drw. No. CH497.00.3
NOMINAL DIAMETER OF AXLE - 234.2mm
Solid wheel statically balanced,
admissible residual imbalance: 75 gm
HEXAGON HEAD PIPE PLUG DIN909 - R1/4 - St
ER7
ISRAEL RAILWAYS
ROLLING STOCK DIVISION
SOLID WHEEL ϕ 1067
(For Diesel Locomotive EURO 4000)
456.00.1
ME
Scale 1:2
APPENDIX 10

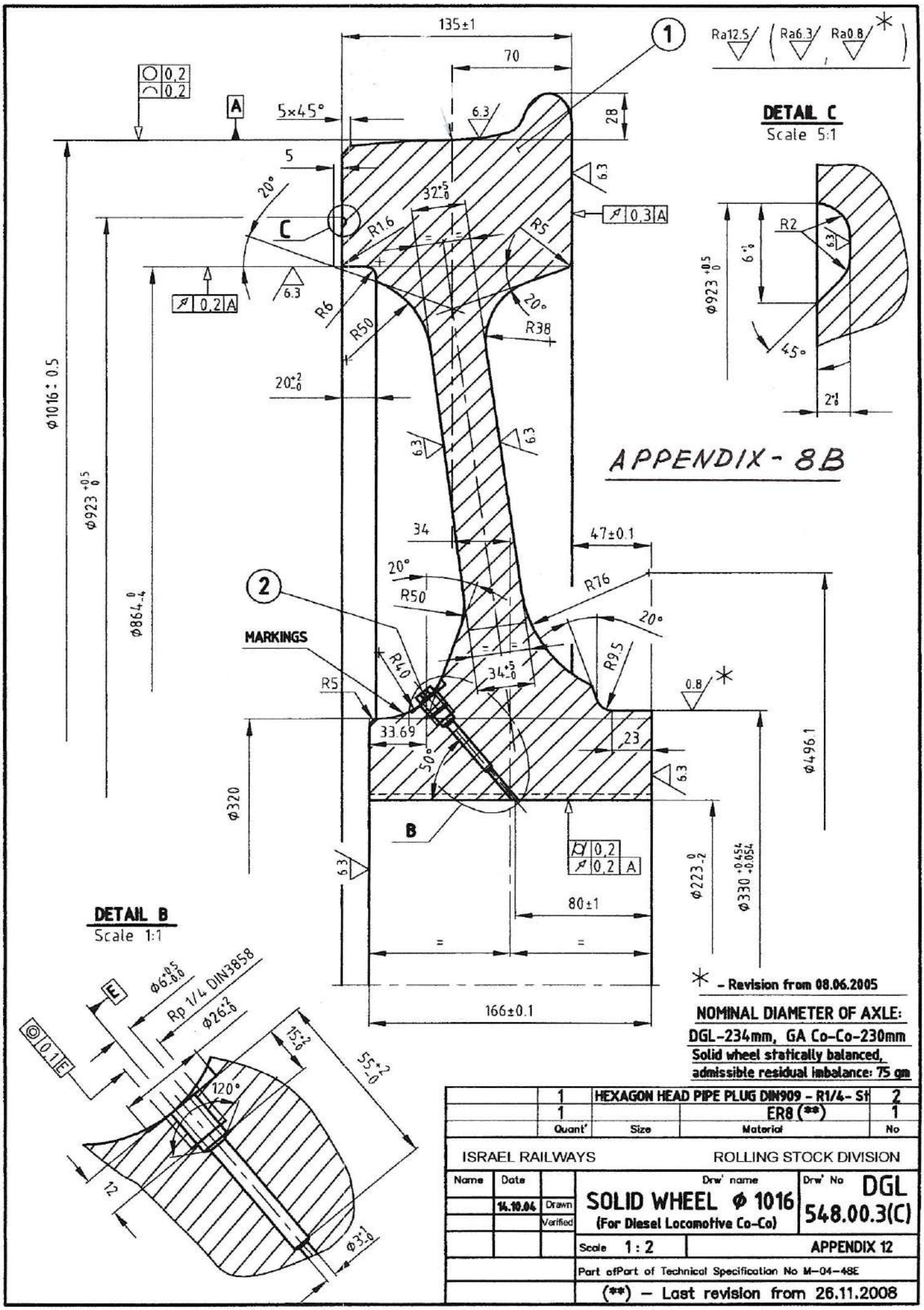
135±1
70
Ra12.5
Ra6.3
Ra0.8
0,2
0,2
A
5×45°
6.3
28
DETAIL C
Scale 5:1
5
20°
32+5 -0
R1.6
R5
0,3 A
C
6.3
0,2 A
R6
R50
20°
R38
R2
6.3
φ923 +0.5 0
6+1 0
45°
2+1 0
20+2 -0
φ1016 ± 0.5
6.3
6.3
APPENDIX - 8B
φ923 +0.5 0
34
47±0.1
20°
R50
R76
20°
MARKINGS
R40
R9.5
R5
34+5 -0
0.8
33.69
23
50°
6.3
φ496.1
φ320
B
0,2
0,2 A
φ223 0 -2
φ330 +0.454 +0.054
6.3
80±1
DETAIL B
Scale 1:1
φ6+0.5 -0.0
E
Rp 1/4 DIN3858
φ26+2 -0
0.1 E
15+2 -0
55+2 -0
120°
12
φ3+1 -0
166±0.1
* - Revision from 08.06.2005
NOMINAL DIAMETER OF AXLE:
DGL-234mm, GA Co-Co-230mm
Solid wheel statically balanced,
admissible residual imbalance: 75 gm
1 HEXAGON HEAD PIPE PLUG DIN909 - R1/4- St 2
1 ER8 (**) 1
Quant' Size Material No
ISRAEL RAILWAYS ROLLING STOCK DIVISION
Name Date
14.10.04 Drawn
Verified
Drw' name
SOLID WHEEL φ 1016
(For Diesel Locomotive Co-Co)
Drw' No DGL 548.00.3(C)
Scale 1 : 2
APPENDIX 12
Part ofPart of Technical Specification No M-04-48E
(**) - Last revision from 26.11.2008

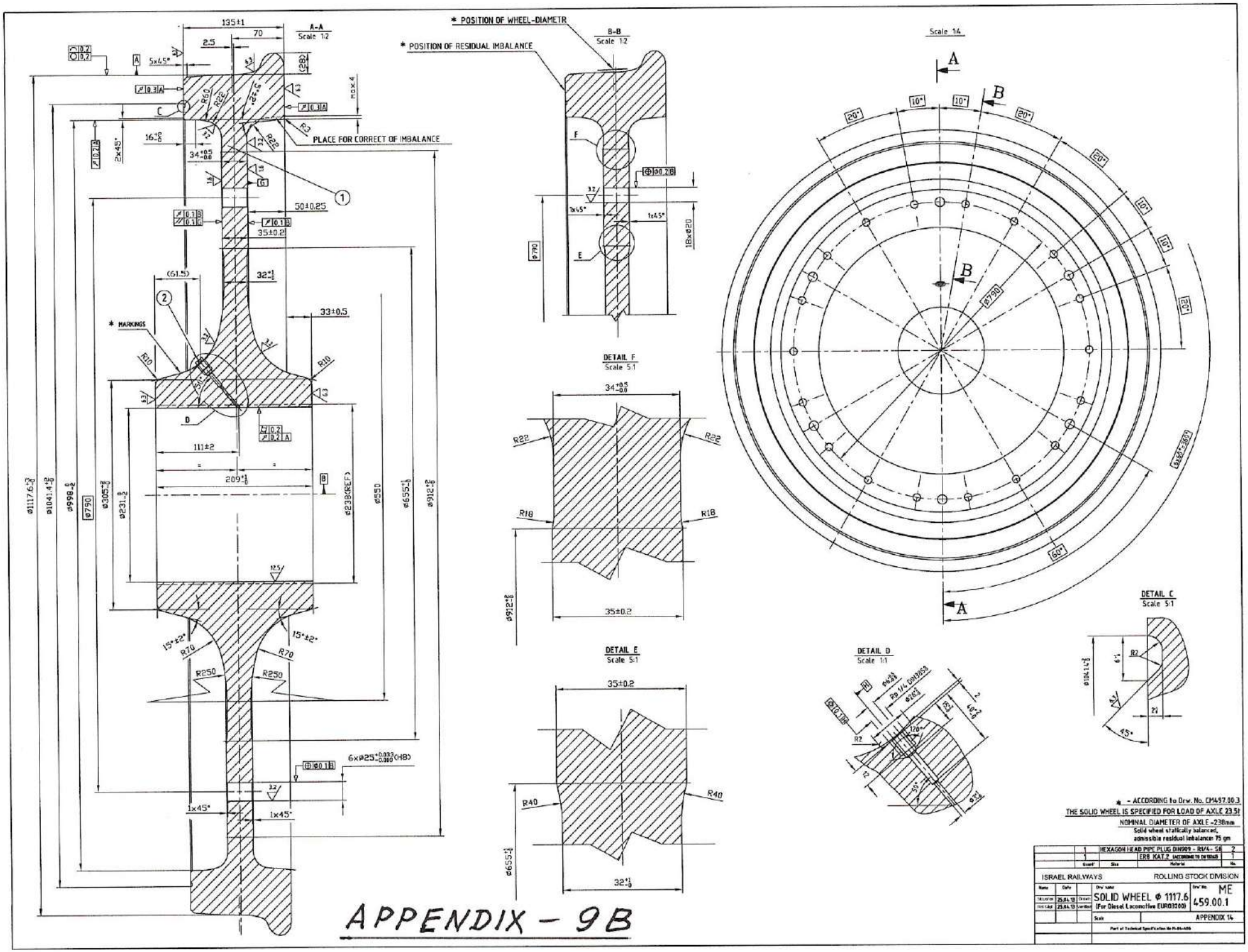
A-A
Scale 1:2
B-B
Scale 1:2
Scale 1:4
* POSITION OF WHEEL-DIAMETR
* POSITION OF RESIDUAL IMBALANCE
PLACE FOR CORRECT OF IMBALANCE
* MARKINGS
DETAIL F
Scale 5:1
DETAIL E
Scale 5:1
DETAIL D
Scale 1:1
DETAIL C
Scale 5:1
6x⌀25 (HB)
* - ACCORDING to Drw. No. CM497.00.3
THE SOLID WHEEL IS SPECIFIED FOR LOAD OF AXLE 23.5t
NOMINAL DIAMETER OF AXLE -238mm
Solid wheel statically balanced,
admissible residual imbalance: 75 gm
HEXAGON HEAD PIPE PLUG DIN909 - R1/4- St
ER8 KAT.2
ISRAEL RAILWAYS
ROLLING STOCK DIVISION
SOLID WHEEL ⌀ 1117.6
(For Diesel Locomotive EURO3000)
ME 459.00.1
APPENDIX 14

APPENDIX – 9B

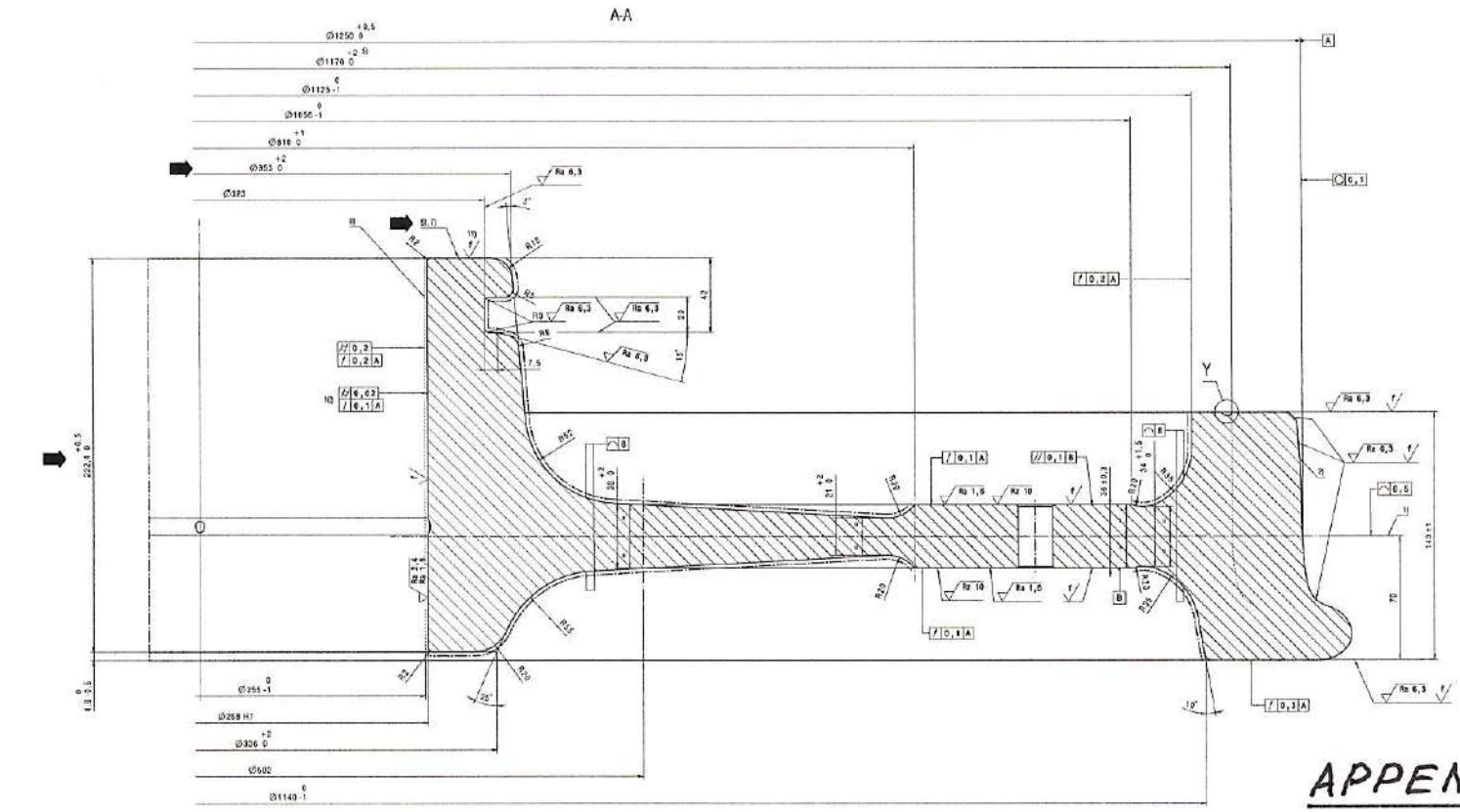
A-A
Ø1250 +0,5 0
Ø1170 +2,5 0
Ø1125 0 -1
Ø1050 0 -1
Ø810 +1 0
Ø353 +2 0
Ø323
Ra 6,3
Rz 6,3
Rz 10
Ra 1,6
Rz 1,6
Ra 3,2
Rz 12,5
R2
R5
R10
R12
R20
R22
R23
R25
R35
R55
R602
R1,5
R2,5
R3,5
R4,5
R6,5
R7,5
R8
R9
R13
R15
R19

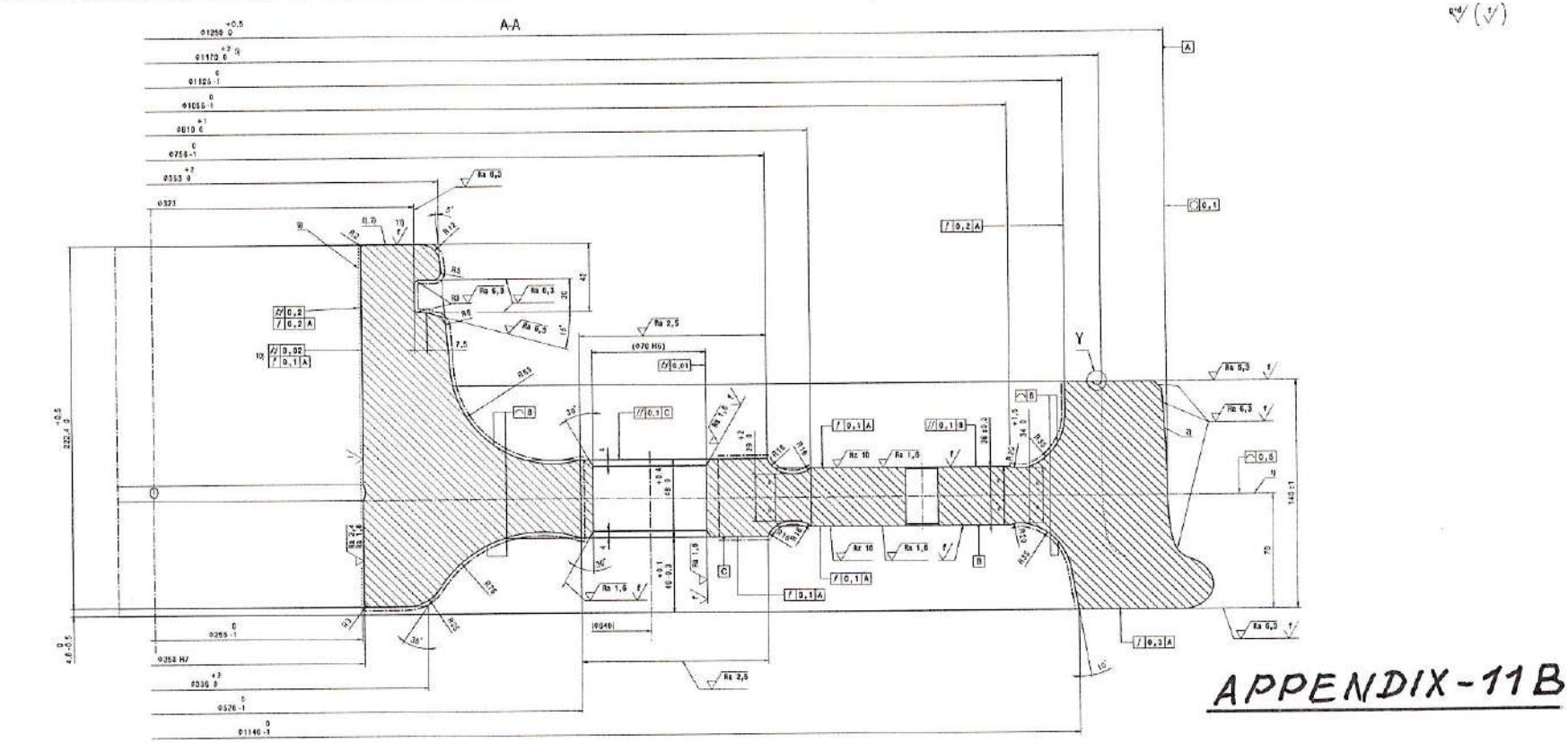

Coating according to the order-related paint instruction	
symbol	Paint coating
	first coat
	top coat
	first coat max. layer thickness 40µm
	free of paint corrosion resistant
	threads and fitting surfaces have to be absolutely free of coating

1) Thread undercut plane

2) Wheel profile according to EN 13715 - S1002 / h26 / o31 / d1,7%

3) Threaded bore countersunk acc. to DIN 76

4) Sweat removed from bores, bore run-out obtained

5) Wheel limit

6) Wheel statically balanced
Allowable static imbalance 75 gm. Symbol E2 marked acc. to EN 13262 in the direction of the actual position of the imbalance

7) Marking acc. to EN 81277 and EN 13262 with height of characters 10 mm
- Cast number
- Logo or mark of company manufacturing the solid wheel
- Serial number of solid wheel per cast
- Month of production of solid wheel
- Year of production of solid wheel
- Steel grade
- Test stamp for the finished solid wheel

8) Hexagon head screw plug DIN 910-R14

9) Possible alternative sourcing (hub pre-drilled) Bombardier Article Number 3EGS675111B3803

10) Every slight convexity within permitted tolerances existing in the wheelbore the resulting larger diameter must be towards the flange side of the wheel

11) On the outer front face of the wheel hub the first coat and top coat have to be applied after assembly of the wheelset.

12) Valid for both front and back face of the holes Ø70.

Technical requirements acc. to EN 13262 (category 2, standard defect, 7mm) and EN 582277

The technical requirements document (RFD) 3EGS675111A0800 of Bombardier has to be observed.

The wheelset product standard 100.02734 - only chapters 1 to 10 and appendix A and B of Bombardier has to be observed.

Transition regions and radiusnatural smoothened, free of burrs and scores

——— first coat and top coat

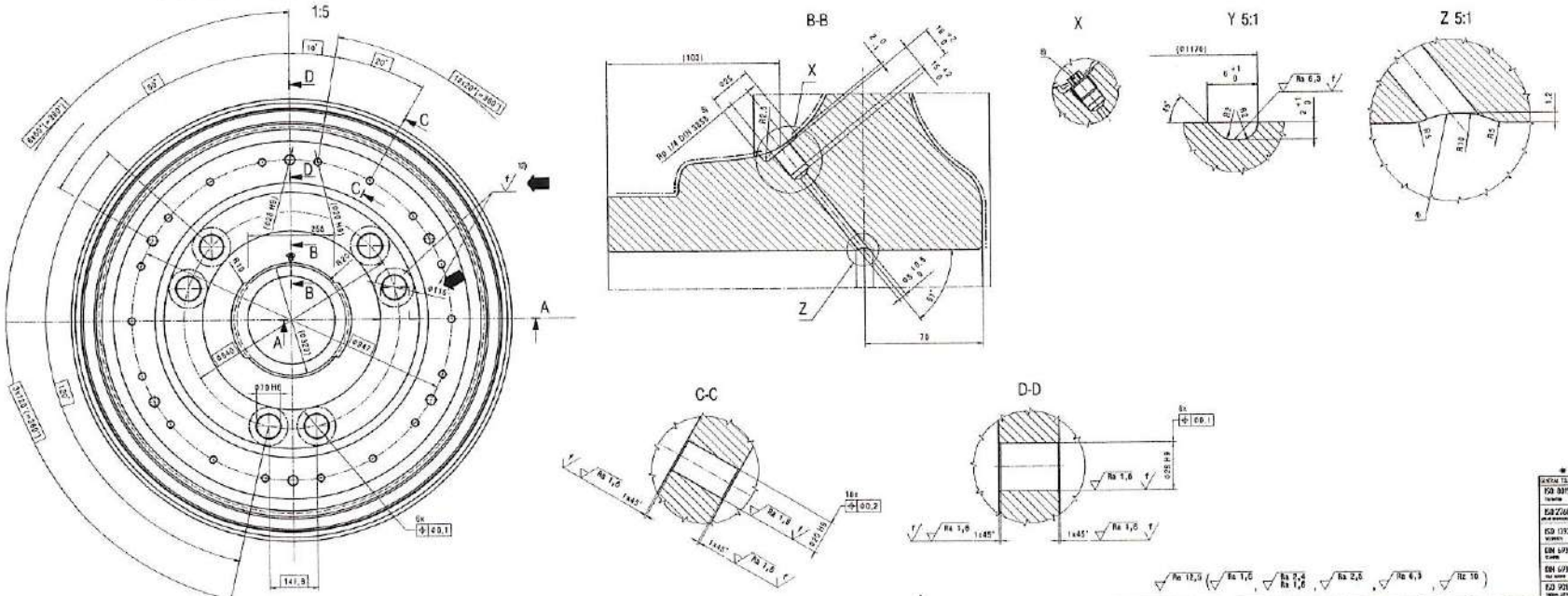

29	H9	0,052 / 0,000
79	H9	0,052 / 0,000
13	H8	0,010 / 0,000
256	h7	0,052 / 0,000
nominal size	tolerance	limit deviations

Part edges ISO 13715

GENERAL TOLERANCES	Provider for			Library	
ISO 8015				Code	
ISO 2768-mK				Scale 1:1	
ISO 13920-B F					
DIN 6930-m					
DIN 6715					
ISO 9013-422					
				SOLID WHEEL WITH BOREHOLES	
				BOMBARDIER	3EGS675111A2103

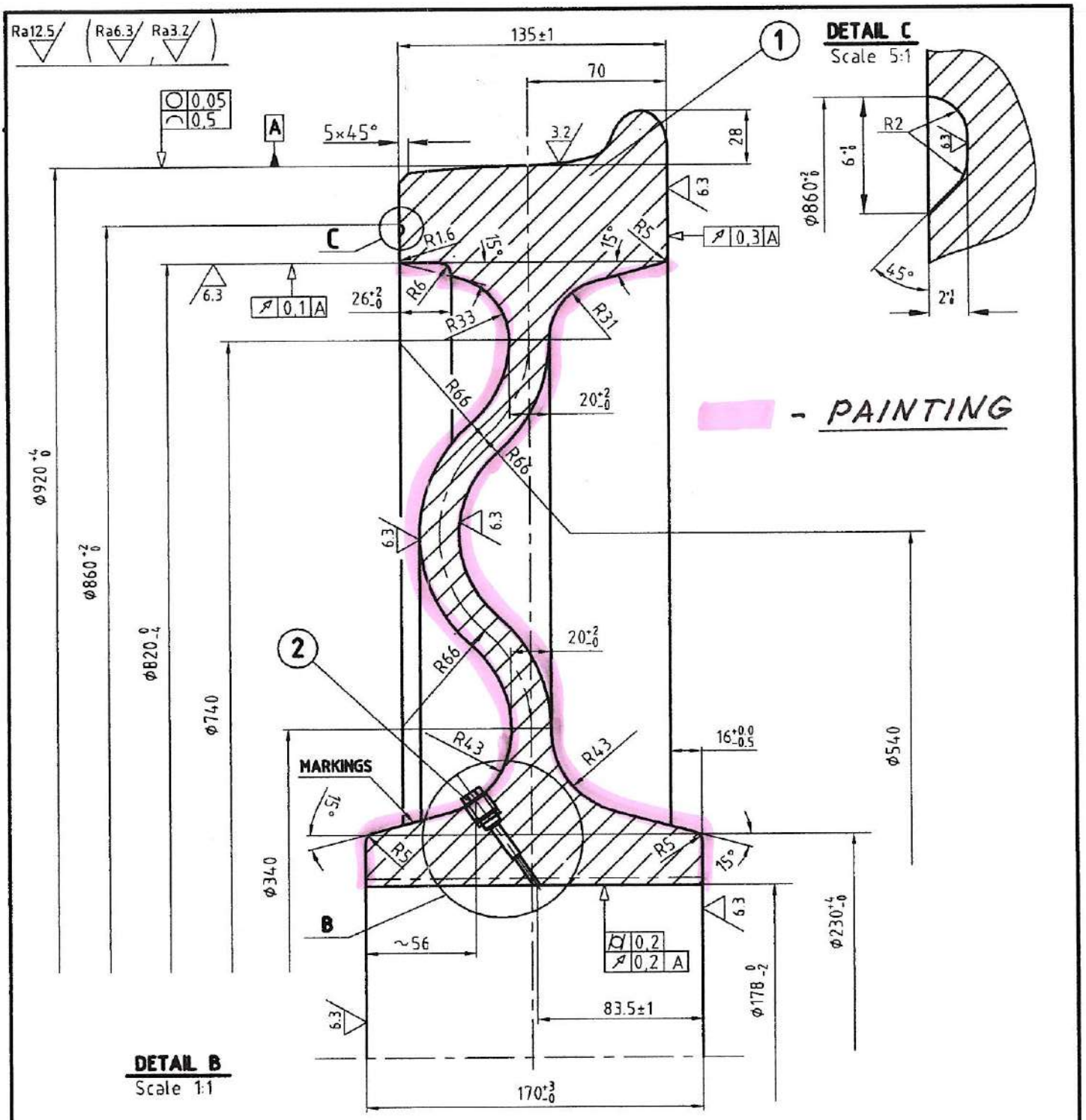

- PAINTING

APPENDIX-2P

Solid wheel statically balanced, admissible residual imbalance: 50 gm

NOMINAL DIAMETER OF AXLE 185 mm

	1	HEXAGON HEAD PIPE PLUG DIN909 - R1/4- St		2
	1		ER8 (*)	1
	Quant'	Size	Material	No

ISRAEL RAILWAYS — ROLLING STOCK DIVISION

Name	Date			
	14.10.04	Drawn	SOLID WHEEL (FOR DOUBLE-DECK COACHES) Drw' name φ 920	Drw' No ME 428.00.3
		Verified		
			Scale 1 : 2	APPENDIX 5

Part of Technical Specification No M-04-48E

(*) – Last revision from 26.11.2008

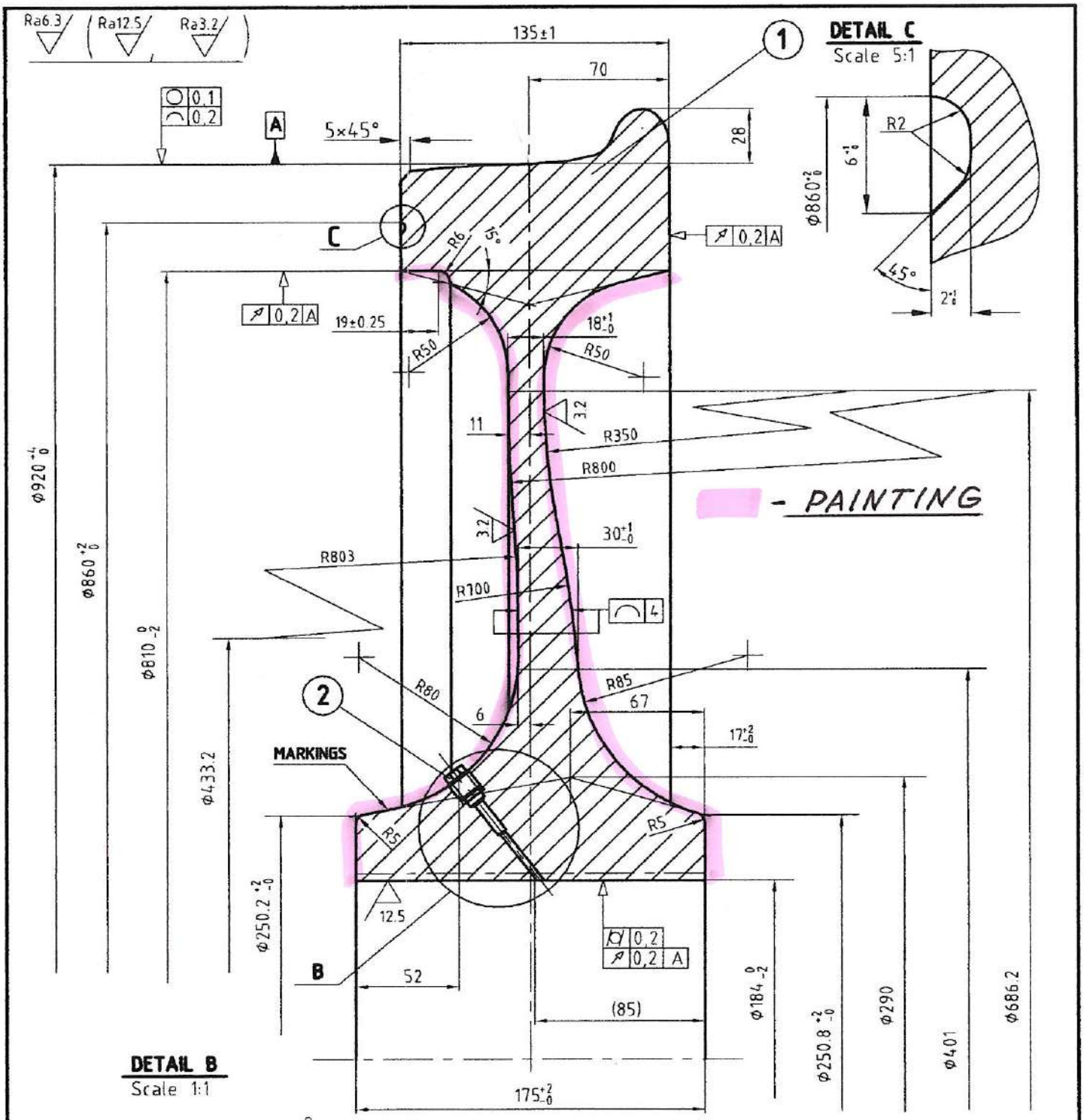

	1	HEXAGON HEAD PIPE PLUG DIN909 - R1/4- St		2
	1		ER7	1
	Quant'	Siz	Material	No

ISRAEL RAILWAYS — ROLLING STOCK DIVISION

Name	Date			
	26.11.08	Drawn	SOLID WHEEL ϕ 920 (FOR SINGLE-DECK COACHES)	Drw' No ME 437.00.3
		Verified		
			Scale 1 : 2	APPENDIX 6
			Part of Technical Specification No M-04-48E	